ECOLOGICAL AND ECONOMIC ASPECTS OF ELECTROCHEMICAL PURIFICATION OF QUARRY WATERS FROM THE IONS OF HEAVY METALS

Tsisana Gagnidze

Keywords:electrochemical processing; quarry waters; copper

The problems of purification of quarry waters from the ions of heavy metals by the use of electrochemical method are considered and a construction of electrochemical reactor is described allowing to perform the so-called channel electrolysis at a high rate of liquid flow along of the electrodes in the conditions of limiting cathode current density (J_k). Technological schemes of complex processing of quarry waters for separation of useful components and estimation of their economic efficiency are presented.

* Corresponding Authors
Tel:+995(032)2 3014 30
E-Mail: ts.gagnidze@mail.ru
[a] I. Javakhisvili Tbilisi State University, R.Agladze Institute of Inorganic Chemistry and Electrochemistry, Georgia, Tbilisi, Mindeli str.11, 0182

INTRODUCTION

The problem of extraction of heavy metals from the sewage of mining production is very daunting in industrial regions.[1] In the process of long-term storage of the residues of processing of polymetallic sulfide ores, under the action of air oxygen, the gradual oxidation of sparingly soluble sulfides of heavy metals takes place with a formation of readily soluble compounds - sulfites and sulfates. These oxidation products penetrate to undersoil mine and shaft waters as a result of leaching with a consequent environmental contamination.

The ions of heavy metals, by a stress indicator, by their harmful environmental effect are even ahead of the residues of nuclear power plants and entities producing the organic compounds. Biosphere contamination by the ions of heavy metals is at the first place and is estimated as 135 points in the scale of ecological stress-factor, whereas an environmental contamination by radiation residues is estimated as 40 points by the same scale.[2] Therefore purification of the quarry waters (QW) from the ions of heavy metals is primarily considered as the ecological problem. From another hand, QW which contain a significant amount of valuable components, and in connection with their high cost, may be considered as a raw material for the production of a marketable product. Elaboration of profitable technology for their extraction from mentioned waters by substantial economic effect is a highly actual problem.

The problem of purification of QW from the ions of heavy metals is also actual for Bolnisi Region of Georgia. In this region QW contain toxic ions, an amount of which is significantly higher than limiting permissible concentration (LPC):

Table 1. Content of metal ions in QW of Bolnisi Region.

Element	Cu	Zn	Fe	Cd	pH
kg ·m^{-3}	0.8 ÷1.2	0.4 ÷0.7	1.0 ÷1.4	0.04	2.5

Annually from quarry streams the following is removed (in tons): Cu - 1290; Zn - 430÷760; Fe - 1100÷1500; Cd - 4.34; SO_4^{2-}ions - 4400. Therefore QW, containing the significant amount of useful components should be considered as the anthropogenic raw material, and at their complex processing, the considerable profit may be obtained besides the solving of a major ecological problem.[3.]

The copper ions are one of the primary sources of hydrosphere contamination by the ions of heavy metals. Purification of QW from copper ions in Join-Stock Company “Madneuli” (Georgia) is mainly carried out by cementation method which is slightly improved in technological viewpoint by the fact that a low-grade iron powder is used instead of steel chips and scrap. As a result, for deposition of 1 ton of copper powder more than 2 tons of iron precipitator is used, whereas the theoretical consumption comprises 0.9 tons. Obtained product involves a low-grade concentrate containing 50-60 % of copper and 15-20 % of iron. Separation of pure copper from mentioned concentrate is a very complicated problem and obtaining of any other product is practically impossible. The greater is an oxidized iron and large granules in the powder the more significant amount of iron passes to the solution by chemical dissolving, and the smaller amount of iron participates in copper precipitation. This process takes place in the practice of Join-stock Company “Madneuli". Moreover, the technology is oriented to water purification only from copper ions.

Direct electrolysis (cathodic precipitation) is among the most promising methods of purification of the quarry and industrial sewage from copper ions, allowing the metal extraction from aqueous solutions as a goal product. In this case, at the cathode, the pure copper powder is separated (it's processing to useful products isn't a complex problem) and at the anode a neutralization of toxic components,

existing in the solution, takes place. Electrolysis performance from concentrated solutions is not a particular challenge. Obtaining of electrolytic copper powder from diluted solutions, containing [Cu] ≤1 $g \cdot L^{-1}$, involves some difficulties.

Therefore electrolysis method doesn't receive a widespread use for copper extraction from diluted solutions (because of low current efficiency and polarization and, hence, because of high voltage at electrolyzer). But the problem is entirely solvable at the creation of corresponding construction of electrochemical reactor which will allow the performance of so-called channel electrolysis, that is to say, an electrolysis at a high rate of fluid motion along the electrodes and in the conditions of limiting current density (J_k).

Over the years, our Institute has been working on the elaboration of such electrolyzer but the mentioned plants had certain disadvantages.[4,5]

EXPERIMENTAL

For copper extraction from diluted solutions ([Cu] ≤ 1 $g \cdot L^{-1}$) by high degree and high current efficiency we have elaborated the original construction of basic electrolyzer with a corresponding hydrodynamic regime (Fig. 1).[6,7] Electrochemical reactor involves the cylindrical body with a conic bottom. In reactor body, a cassette with a radial located fixed electrodes of definite shape is inserted. Manganese titanium dioxide is used as anode material, characterized by high durability in the conditions of long-term operation of an electrolyzer.

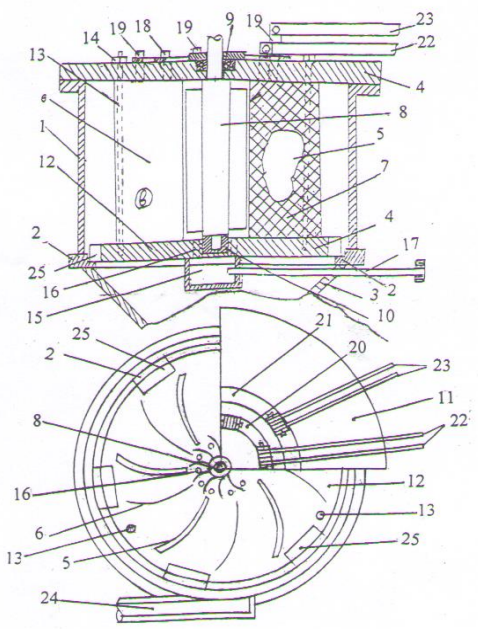

Figure 1. The electrochemical reactor. 1. body; 2. shelf; 3. conic bottom; 4. magazine; 5. anodes; 6. cathodes; 7. slots; 8. mixer; 9,10. bearings; 11,12. upper and lower plates; 13,14. bolts and nuts; 15. box; 16. holes; 17. pipe; 18,19. current lead; 20,21. tires current lead; 22,23. tires rectifier; 24. trough; 25. window.

The anodes are enclosed in an acid-resistant bag to avoid the permanent recharge iron ions existing in water. As a result, the power consumpion reduces by 5-15 %. The plates from stainless steel were used as the cathodes. In cassette center, the mixer is located which directs a liquid flow between the electrodes by a high rate. The electrode shape is favorable for the increase of the distance between opposite electrodes from the center to the periphery, on one side.

This fact allows the reducing of current density on the electrodes to the same direction. Simultaneously the depolarizer concentration is decreased from the center to the periphery. Thus an automatic control of the correspondence between concentration and current density takes place which is favorable for maintenance of product maximum current efficiency.

Extraction of electropositive metals is performed in the regime of limiting current. As a result, the spongy precipitate is formed. On the other hand, electrode shape is favorable for the conservation of liquid flow of circular motion. The reactor operates by the hydro-cyclone principle and liquid flow, moving along the electrodes by high rate, removes the cathode product and involves it to a circular motion on the inner surface of cylindrical reactor body. The particles of copper powder lose a rate and penetrate into the collector through the holes on reactor bottom. In the reactor, a significant improvement of the intensity of forced convection and solving the problem of removal of copper powder from the cathodes is attained.

The technological process is continuous, and a reactor is similar to an (electric) filter, in which its selective extraction takes place at the passing of the solution, contaminated by toxic copper ions. Precipitate dispersity increases the area of its surface significantly and decreases the real current density considerably on the electrode surface. The voltage on reactor clamps is no more than 2-3 V. Obtained product - copper contains only the oxygen as an impurity which is easily removed at product treatment in reducing medium.

RESULTS AND DISCUSSION

Cascade arrangement of two mentioned electrochemical reactors, one of which operates at high current densities and another at relatively low ones, gives 95 % copper extraction from QW (Table 2). Power consumption, in this case, comprises 4000 $kW \cdot hour \cdot ton^{-1}$, corresponding to 5-10 % of the copper cost. At remelting of electrolytic copper powder, a copper ingot of 99.0 % was obtained

For complex processing of QW for the purpose of extraction of useful components and their further processing for obtaining of valuable, marketable products, we have elaborated several technological schemes (Fig. 2).

Considering QW as the technogenic raw material the following marketable - commercial products may be obtained by mentioned schemes: copper ingots of 99.8 %; vitriol and other chemical compounds; bio dye and other pigments; zinc and its powder; gold; pure secondary water.

Table 2. Experimental results at cascade arrangement of two reactors.

No.	QW feed, $L \cdot h^{-1}$	Current,A	Voltage, V	Time, h	Cu, $g \cdot L^{-1}$ initial	Cu, $g \cdot L^{-1}$ final	Cu removal, %	Current efficiency, %	Specific power consumption, kWh^{-1}
1	12	15	2.8	3.5	1.08	0.159	85.2	62.1	3800
2	12	4	2.4	3.5	0.159	0.05	68.6	27.5	7339
				Total			95.4	54.9	4175

Table 3. Estimation of economic efficiency (1000 USA dollars) of technological schemes of processing of QW.

	I	Pr	PA	MC	Product price		Gain from product		Additional cost		Taxes		Annual profit	
					O	P	O	P	O	P	O	P	O	P
# 1	800	Cu (99.8%)	830	600	6111	5482	5072	4550	4472	3950	1582	1412	2890	2538
# 2	700	Vitriol (99.6%)	3300	700	2413	2300	9344	8796	8644	8096	2977	2797	5667	5299
		Gold	1065*		1222	1133								
# 3	1100	Copper	830	1000	6111	5482	6266	5584	5260	94584	1916	1693	4344	2891
		Zinc	400		2971	2587								
# 4	1000	Vitriol	3300	1100	2413	2300	10532	9757	8900	8657	3231	3055	5670	5602
		Gold	1065*		1222	1133								
		Zinc	400		2971	2587								

O-optimistic estimation; P-pessimistic estimation; *in ounce, #1and #2; short and #3and #4 are full technologies. The prices for corresponding metals are taken from official data of London Exchange on 14.02.2017, on other products – by corresponding tariffs. I-investment, Pr-product, PA product amount in ton, MC- maintenance cost

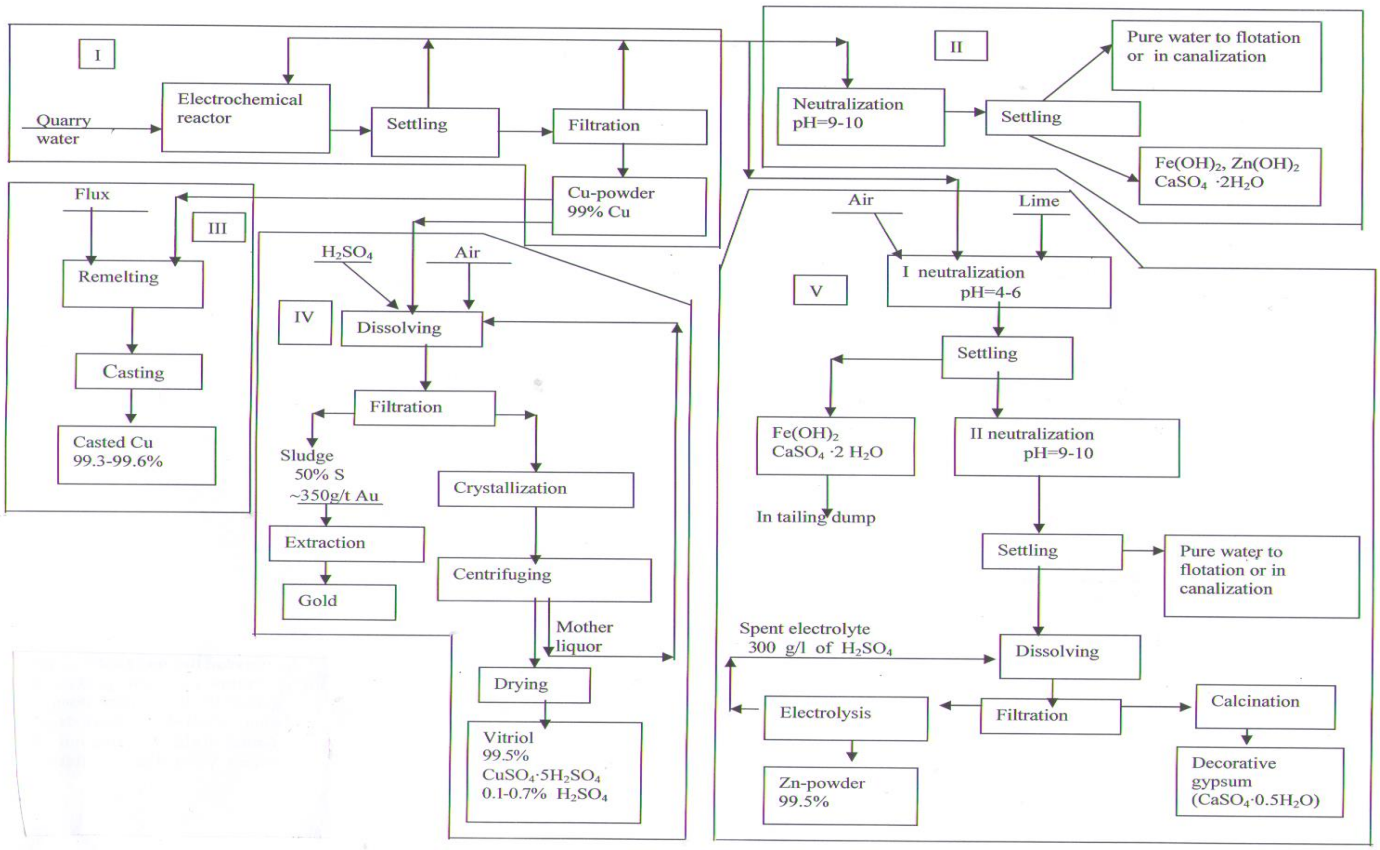

Figure 2. Short and full Schemes of processing of quarry water. 1. short scheme _ I+II+III (units); 2. short scheme _ I+II+IV(units); 3. full scheme _ I+III+V(units); 4. full scheme _ I+V+IV(units).

The majority of these products are scarce. Therefore their realization is beyond question. When it is considered that the main raw material – QW is free of charge and field cost are relatively small, the price cost of obtained production is low. This fact increases its competitive ability significantly.

The scheme of processing of electrolytic copper is best suited for obtaining of vitriol – traditional fungicide for Georgian agriculture. Vitriol preparation was performed by conventional, but significantly simplified technology. Obtained vitriol contains a negligible impurity and is characterized by dendrite structure with developed surface.

In Table 3 the estimation of economic efficiency of QW processing by proposed schemes is presented. In the case of full-scale realization of proposed technology annually obtaining of the profit 8-9 million US $ is possible Table 3.

CONCLUSIONS

1. Construction of electrochemical reactor has been elaborated allowing to perform the process of purification of quarry waters from copper ions by high efficiency (copper extraction by 95 %) at power consumption corresponding to 5±10 %.

2. Technological schemes were elaborated for complex processing of quarry waters for separation of useful components for their processing into costly marketable production.

3. It was shown that at a full-scale realization of elaborated technological schemes an annual profit of 8-9 million US dollars might be obtained.

4. The hydrometallurgical technology of sewage purification of our elaboration belongs to so-called self-financing technologies. Even insignificant investment initiates a self-financing.

REFERENCES

[1]Lago-Vila, M., Rodríguez-Seijo, A., Arenas-Lago, D., Andrade, L., Vega, M. F. A., J. Soils Sediments**, 2016**, in press, p. 18. DOI: 10.1007/s11368-016-1354-0; Adabanija, M. A., Oladunjoye, M. A., J. Geochem. Explor., **2014**, *145*, 148-168. DOI: 10.1016/j.gexplo.2014.06.003; Stumbea, D., Env. Sci. Pollut. Res., **2013**, 20(11), 7643-7655. DOI: 10.1007/s11356-013-1656-3; Navarro, A., Carbonell, M., Env. Geochem. Health, **2008**, 30(3), pp. 273-289. DOI: 10.1007/s10653-007-9123-z.

[2]Zubchenko, V. Gibkie avtomatizirovannie galvanicheskie linii. Spravochnik. Izdat. "Mashinostroenie," M., 1998, 67.

[3]Gvelesiani, J., Gagnidze, Ts., Mamporia, M. Sak. Mets. Akad. Moambe, **2005**, *172(2)*, 27-30.

[4]Gagnidze, Ts., Geleishvili, G., Gvelesiani, J., Lezhava, T., Mamporia, M. Samretsvelo da karieruli chamdinare tskhlebis spilendzisagan gatsmendis elektrochimiuri kherkhi da motskobiloba. Saqpatenti, **2004**, 3369.

[5]Lezhava, T., Gvelesiani, J., Gagnidze, Ts., Mamporia, M. *Purification of Waste Water from Ions of Heavy Metals*. TMS Fall Extn. Process. Div.: Sohn Int. Symp., **2006**, *5*, 569-574.

[6]Gvelesiani,J. ,Gagnidze, Ts., Mamporia, M. Karieruli da samretsvelo chamdinare tskhlebis gadamamushavebeli electrochimiuri reactori. Saqpatenti, **2010**, 4900.

[7]Levich, V. *Fiziko-chimicheskaia hydrodinamika*. Izdat. "Fizmatgiz", M., **1959**, 296.

Received: 01.03.2017.
Accepted: 13.04.2017.