Journal of Materials Science and Engineering B 7 (5-6) (2017) 107-113
doi: 10.17265/2161-6221/2017.5-6.003

Elaboration of Ecologically Save Technology for Obtaining of High Purity Metallic Antimony and Gold from Gold-Bearing Antimony Ores

Tsisana Gagnidze[1], Jondo Bagdavadze[2], Rusudan Chagelishvili[1], Zurab Tsikaridze[2], Ketevan Ukleba[2] and Zhiuli Kebadze[1]

1. I. Javakhishvili State University, R. Agladze Institute of Inorganic Chemistry and Electrochemistry, Tbilisi 0179, Georgia

2. F. Tavadze Institute of Metallurgy and Materials Science, Tbilisi 0160, Georgia

Abstract: A new technology for integrated processing of gold-bearing antimony ores has been developed in order to solve certain problems in the gold-mining industry. The technology based on vacuum-thermal processes allows not only extraction of gold but also production of associated materials—antimony sulfide (Sb_2S_3) and metallic antimony (Sb). The paper presents theoretical as well as applied research. Kinetics of the process of antimony sulfide extraction from the ores was studied for different fractions. Optimal conditions for obtaining of Sb_2S_3 were determined. The resulting product was a high-purity metallic Sb (~99.2 mass%). For extraction of gold from a cinder of vacuum-thermal processing of a concentrate, along with a thiourea method, the ecologically pure electrochemical method of our elaboration has been used. The effect of main technological parameters on the process of electrochemical leaching of the residues has been studied in the presence of gold complex former—thiourea in chloride system and optimal conditions of leaching were established providing the gold extraction from gold-containing residues by 82-90% in the conditions of so-called "soft" oxidation without release of molecular chlorine at the anode and eco-contamination.

Key words: Gold-bearing ores, antimony, vacuum-thermal, gold extraction.

1. Introduction

Up to date, the problem of mining and processing of mineral raw materials is still associated with technical and environmental difficulties. Therefore, development of modern technologies and their effective application to industry are considered as the most important national problems. Relevance of the topic increases when it comes to the mining of precious metals, in particular, of gold.

In this connection the occurrences of gold-bearing antimony ores of Caucasian Region (e.g. Zopkhito, Georgia) are of a special interest. The conventional technologies for processing of these particular ore types still apply open-top furnaces characterized by high toxicity, and hence by environmental unfriendliness.

Present work offers a new technology for the complex processing of gold-bearing antimony ores. Together with workability, the developed process is eco-friendly that is very important for the protection of unique nature of the Caucasus Region. Along with it, application of the technology to industry promotes solving of social problems to support steady development of the region.

2. Experimental

The object of our research involves gold-stibium ores of the Zopkhito deposit (Mountainous Racha, Georgia), the composition of which is given in Table 1.

Corresponding author: Tsisana Gagnidze, Dr., research fields: hydrometallurgy (processing of gold-containing persistent sulphide ores and technogenic raw materials), printed circuits technology, alternative source of energyenergy, chemical current sources.

Table 1 Chemical composition of the concentrate of Zopkhito gold-containing ore.

Au, g·ton^{-1}	Ag, g·ton^{-1}	Sb, %	Fe, %	Al, %	Cu, %	As, %	SiO_2, %	Pb, %	Ni, %
4.5	12	6.0	5.0	5.0	0.2	1.5	75	0.1	0.1

Processing of stibium raw materials is carried out by the reaction: $Sb_2S_3 + 3Fe = 2Sb + 3FeS$, called precipitation melting [1]. The resulting FeS is a relatively resistant compound. To obtain low-temperature matter and slag into the charge, Na_2S, Na_2O and some other sodium compounds are added as fluxes. On the basis of this reaction, the experiments were conducted on the production of metallic Sb without the use of fluxes. First of all, Sb_2S_3 (krudum) was obtained from the ores by the vacuum-thermal method.

2.1 Preparation of Sb_2S_3

Before processing metallic Sb from appropriate ores it is necessary to produce antimony sulfide (Sb_2S_3): vapor pressure of antimony sulfide (Sb_2S_3) is rather low and it can be prepared by thermal evaporation under vacuum at relatively low temperatures 500-700 °C with subsequent condensation.

Kinetics of the process was studied to determine optimal parameters for obtaining Sb_2S_3. Experiments were conducted under the vacuum of P ~10^{-5} MPa on the self-recording device designed and constructed to control weight loss of the sample (Fig. 1).

The device works by the following principle: heating of the sample (8) provides evaporation of the sample components violating equilibrium of the electromagnetic weights (1) due to deflection of the balance indicator from zero exponent, photo detector (3) switches on and via electronic system sends signal to the reversible engine (5) attached to rheostat (6); the signal switches on the reversible engine, moving jumper resistor to necessary direction; as a result, the current intensity in electromagnetic coil (7) becomes adjusted and, through feedback, the weights return back to equilibrium position, and so on. The above-described process is registered through the rheostat (6) plugged in the potentiometer; calibration coordinates of the rheostat are: a sample weight loss (mV)—duration of the experiment (min).

An accurate picture of the time dependent weight loss is obtained via the plot graduated by mV to mg transfer.

Regularity and optimal conditions determined for preparing antimony sulfide are as follows: vacuum P ~10^{-5} MPa, fraction (-1 + 0.5) mm, temperature ~650-700 °C, duration ~40 min, extraction over 90 mass%.

Chemical-, X-Ray diffraction- and metallographic analyses show that along with Sb2S3 arsenic (appeared in the ore as arsenic sulfide and its complex compounds) also transfers into condensate.

To remove arsenic from antimony sulfide it is heated to ~450 °C for 2 hours under vacuum; subsequently, the residual portion is heated to ~700 °C, also under vacuum. As a result of these technological manipulations the content of arsenic in the condensate significantly decreases.

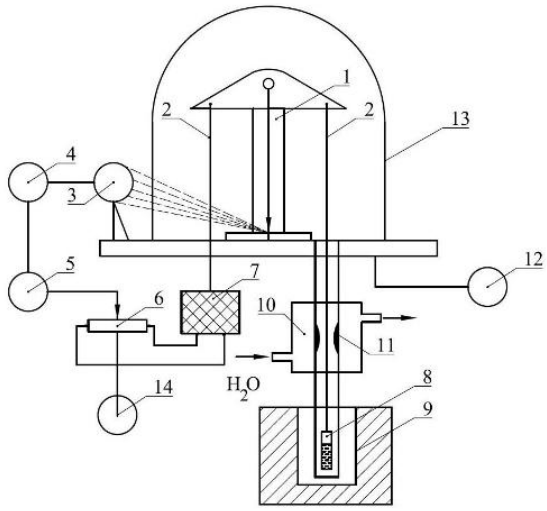

Fig. 1 Experimental device.
1-electromagnetic weights; 2-suspension brackets of weights; 3-photo detector; 4-electronic system; 5-reversible engine; 6-rheostat; 7-electromagnetic coil; 8-briquette (sample); 9-high-temperature furnace; 10-cooling plant; 11-condensate; 12-vacuum unit; 13-glass cap for pressurization system; 14-potentiometer.

2.2 Preparation of Metallic Sb

The main reaction for the production of metallic Sb is the interaction of Sb_2S_3 with iron. TA (thermodynamic analysis) was carried out for the following reaction: Sb_2S_3 + Fe.

Figs. 2 and 3 show the results of TA for the main reaction for obtaining of metallic Sb: Sb_2S_3 + 2Fe and Sb_2S_3 + 4Fe (Figs. 2 and 3).

Presence of the condensed Sb_2S_3 in the system (Fig. 2) shows that reduction of sulfide within the temperature range from 600 to 1450 K is not ultimate, probably due to insufficient amount of iron (Fe).

TA results of the reaction Sb_2S_3 + 4Fe (Fig. 3) show that the system is free of Sb_2S_3, which is confirmed experimentally as well.

The procedure for preparing of metallic Sb is as follows: the obtained antimony sulfide is mixed with an iron powder in a special mixer for 4 to 5 hours. The mixture is placed in a sealed steel container and heated for 3 hours in a shaft furnace to ~700-800 °C in argon atmosphere under pressure of 1 atm. The resulting mass is grounded to powder and placed in a heating unit of the kinetic device (at ~850 °C under vacuum of P ~10^{-5} MPa). The experiments show that at ~850 °C metallic antimony intensively evaporates condensing on the walls of cool quartz tube. According to chemical analysis the resulting condensate consists of mainly metallic antimony.

Experiments show that the content of reducing agent (Fe) has a great influence on the evaporation rate and on the product yield. A small amount of iron is not sufficient for full reduction of antimony: the resulting mixture consists of metallic antimony and unreduced sulfide. Full antimony reduction of sulfide is quite possible with a large amount of iron, however excessive iron forms some undesirable compounds (FeSb, $FeSb_2$) thus decreasing amount of the end product, i.e. metallic Sb in the condensate. The best results can be achieved when ratio of the components is Sb_2S_3/Fe = 1.5.

The end product (metallic Sb) of technical purity (~95 mass%) is obtained from sulfides by iron reduction and vacuum evaporation of antimony.

Chemical-, X-Ray diffraction- and metallographic analyses show that along with Sb2S3 arsenic (appeared in the ore as arsenic sulfide and its complex compounds) also transfers into condensate.

Removal of arsenic and sulfur from the metallic Sb is realized by heating of the obtained mass for 3 hours at T ~400 °C, 450 °C and 500 °C under vacuum ~10^{-5} MPa. The resulting product is a high purity metallic Sb (~99.2 mass%).

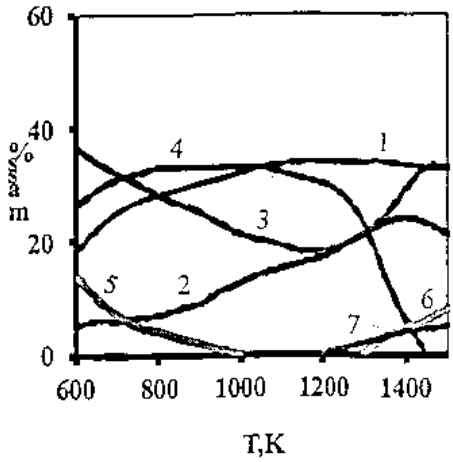

Fig. 2 Temperature dependence of the content of components for the reaction Sb_2S_3 + 2Fe.
1-FeS (c); 2-Sb (c); 3-$FeSb_2$ (c); 4-Sb_2S_3 (c); 5-FeS_2 (c); 6-SbS (gas); 7-S (gas).

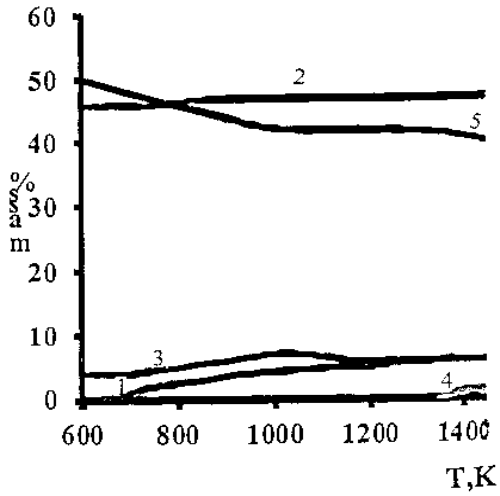

Fig. 3 Temperature dependence of the content of component for the reaction Sb_2S_3+4Fe.
1-Sb (c); 2-FeS_2 (c); 3-FeSb (c); 4-Fe (c); 5-FeS_2 (gas).

Thus, by iron reduction of stibium and its evaporation in vacuum, the final product was obtained: metallic Sb of technical purity and arsenic in non-toxic form, and gold, free from the sulfide layer, completely (100%) remains in the cinder.

After vacuum-thermal treatment of gold-stibium ore, the distribution of components in the condensate and in the residue is given in Table 2.

2.3 Extraction of Gold (Au)

The concentrates with the following content of basic components were tested (Table 3).

From such cinder the gold extraction with the high indexes is possible by hydrometallurgical method.

The main method for the gold extraction from the minerals consists of the cyanic method by which the main amount of the metal is mined all over the world. But the method is characterized by high toxicity and the problem of sewage decontamination is not solved to now. Moreover in relation to gold-containing antimonite ores this method does not provide the economically acceptable results, since the stibium from the sulfide mineral-antimonite is the strong cyanide of the process.

Therefore the problem of the search of economically acceptable methods for processing of gold-containing residues of vacuum-thermal treatment of stibium ores and concentrates will allow the solving of the problem of increase of fullness of the use of natural resources at simultaneous reduction of ecological loud.

Among hydrometallurgical methods the thiocarbamide (Thio) method is the alternative and more competitive to the cyanide technology and to a great extent fulfils the modern ecological and economic requirements: low toxicity, kinetic activity, selectivity in relation to the noble metals, moderate price.

Thiocarbamide is the main reagent of thiocarbamide process. For gold dissolving the acid solutions of Thio are used in which the trivalent iron sulfate is introduced as oxidizing agent. The process of gold dissolving in thiocarbamide may be presented by following most probable reaction [3].

$$Au + nThio + Fe(Thio)_2^{3+} \rightarrow Au(Thio)_2^{+} + Fe(Thio)_n^{2+} \quad (2)$$

As a result of researches the optimal regime of thiocarbamide leaching of fine-graded “-0.4 mm) sinter, remained after vacuum-thermal treatment of gold-containing antimony concentrate. Solution composition: Thio-0.5%, H_2SO_4-0.8%, $Fe_2(SO_4)_3$-0.8%. Leaching regime: duration-4 hours, liquid : solid = 5 : 1, stirrer rotational velocity-200 rot/min, temperature (18-25) °C. In these conditions the gold extraction degree from the residues comprises 87% [4].

But at the use of thiocarbamide leaching the difficulties are generated from the viewpoint of the gold further extraction from the solutions (adsorption on activated carbon, gold desorption by following

Table 2 The distribution of components in the condensate and in the residue after vacuum-thermal treatment of gold-stibium ore.

Name of sample	Elements, %									
	Sb	As	Fe	Si	Al	Pb	Cu	Ni	Au, g·ton^{-1}	Au, g·ton^{-1}
Condensate	57.0	10	0.2	1.0	0.2	0.2	0.01	-	-	-
Residues	1.0	0.7	2-5	75	5.0	0.1	0.02	0.1	4.5	1.2

Table 3 Chemical composition of the residue of vacuum-thermal treatment of the concentrate of gold containing antimony ore of Zophito deposit.

Content of basic components in the concentrates								
g· ton^{-1}				Components, %				
Au	Ag	Sb	Fe	Cu	As	SiO_2	Pb	Ni
5.5	1.3	1.0	2-5	0.02	0.7	64-70	0.1	0.1

electrolysis of concentrated solution).

In accordance with the literary data the hydrochlorination method is another alternative of cyanide technology-gold oxidation by molecular chlorine which is introduced in ore pulp [3].

The electrochlorination method with the use of the chloride systems was selected by us instead of hydro chlorination for processing the cinders of vacuum-thermal treatment of gold-containing ores and concentrates. The advantage of electrochlorination method over hydrochlorination consists of simultaneous regeneration at anode-oxidizer of molecular chlorine which oxidizes the gold in the course of leaching with a formation of anionite complex $[AuCl_4]^-$ with the un-stability constant K = 10^{-12} (pK = 11.2) [5].

But the formed anionite complex of the gold $[AuCl_4]^-$ cannot transfer into the catholyte by migration because of its negative charge and, respectively, cannot be discharged at the cathode with a formation of metallic gold and remained in the anolyte. Therefore for gold extraction from the solution by mentioned method the extraction of additional operations is necessary which makes more complicated the leaching process. The negative side of the method is a necessity of the maintenance of high oxidation-reduction potential 1.0-1.2 V at electrochemical leaching (high power inputs). At leaching the excess of molecular chlorine is separated at the anode leading to environmental contamination.

To simplify the electrochemical technology of processing gold-containing ores and concentrates and to elaborate the eco-safe and high-efficient method the researches were performed in the solutions on the basis of the chlorides of alkaline metals by the use of such ligand which forms the strong cationite complex compound with the gold [6].

On the basis of experiments [7] thiourea was chosen as selective complex former with gold which is characterized by penetration into internal sphere of complex compounds of some heavy metals with the formation of new strong complex compounds [8]. By the addition of thiourea in chloride system Red/Ox potential of the solution reduces from 1.0 to 0.4 V. Such low Red/Ox potential of the system allows directing the electrochemical process of leaching gold-containing ore in the conditions of so-called "soft" oxidation without release of chlorine at the anode and environmental contamination [9]. In mentioned conditions gold polarization in anode area and its passing into the solution takes place; as a result, cathionite complex compounds with thiourea $[Au(ThiO_2)]^+$ are formed with un-stability constant K = 10^{-23} (pK = 22) [6] by the reaction:

$$Au + 2ThiO + Cl^- = [Au(ThiO_2)]^+Cl^- + e^- \quad (3)$$

As is seen, cathionite complex of thiourea with gold is considerably more stable than chloride anionite one which is due to low (0.38 V) standard potential of the reaction (3). Along with it, because of the presence of positive charge the passing of gold cathionite complex into cathode area by migration and its discharge at the cathode by the formation of metallic gold is made possible. Mentioned process of electrochemical leaching considerably simplifies gold passing from the ore to the solution and its following extraction since these processes are performed in the same electrochemical apparatus.

The process was carried out at pilot plant of our elaboration (Fig. 4).

The experiments were performed to establish the effect of electrolyte composition and of process regime on the indexes of gold extraction by electrochemical method from the residue of vacuum-thermal treatment of the concentrate of gold-containing antimony ore.

Thus quantitative indexes of gold electrochemical extraction from the concentrate (gold-containing residue) attain maximum value (82-90%) by the use of the solution: 0.5 M KCl + 0.5 M ThiO + 0.03 M Na_2S. In potentiostatic regime: ϕ_a: 0.5 ± 0.05 V, t: 22-32 °C, pH < 3, grinding degree: 0.16 mm.

On the basis of obtained experimental results the

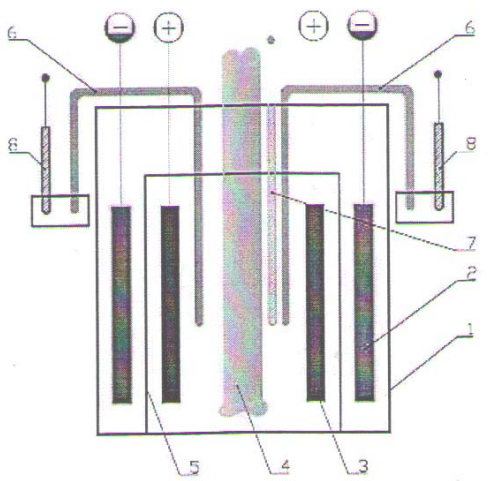

Fig. 4 Scheme of stationary electrolyzer.
1-electrolyzer body; 2-cathode; 3-anode; 4-mixer; 5-diaphragm; 6-electrolytic key; 7-Pt-electrode; 8-Ag/AgCl reference electrode.

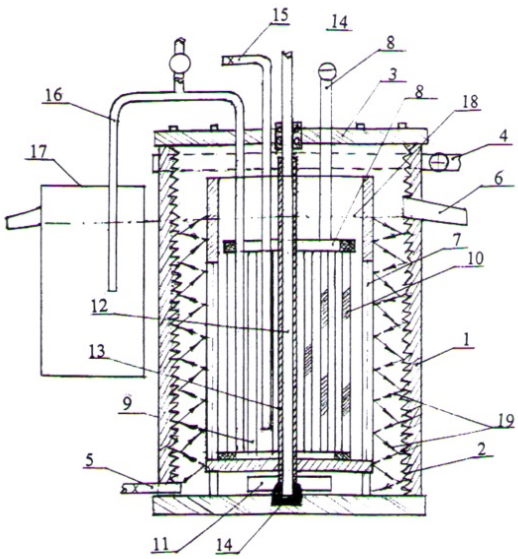

Fig. 5 Electrochemical reactor.
1-reactor body-graphite anode; 2-anode operating surface; 3-reactor cover; 4-current leading rim; 5-pulpsupplying branch pipe; 6-pulp discharging chute; 7-diaphragm-cathode cell; 8-cathode cassette with current lead; 9-cathodes; 10-carbon material tightly reeled up on the cathode; 11-pump-mixer; 12-pump driving shaft; 13-pump shaft isolating pipe enclosure casing; 14-pump shaft bearings; 15-catholyte supplying pipe; 16-siphon drain for spent catholyte; 17-intermediate vessel; 18-solution level; 19-trajectory of pulp circular movement.

continuous technological process for gold extraction from the residue (or ore concentrate) of vacuum-thermal treatment of gold-containing antimony ore of Zopkhito deposit was elaborated and for realization of this process the electrochemical reactor was created with the electrodes of highly-developed surface carbon-fibre materials which are characterized by high efficiency, especially, in the solutions, containing electro-active components of low concentration (Fig. 5).

In the course of ore leaching in anode area the gold dissolving and the formation of the cathionite complex with thiourea takes place. The complex after migration through filtering, thermally treated perchlorovinyl diaphragm enters in cathode area where gold is discharged at the cathode, manufactured from carbon-fibre material and free ligand-containing solution is returned to anode area for pulp preparation.

3. Conclusions

(1) The main advantage of the vacuum-thermal processing involves the following: the increase of complexity of the use of raw material; high extraction of valuable components; reduction of treatment temperature, which is of a considerable importance at processing of readily caking raw material; preparation of the products, for example, of arsenic in non-toxic form; absence of the necessity in gases sanitary purification. Cinders from vacuumizing at temperature to 800 °C contain the stibium up to 1%. There is no gold in the sublimations. The real 100% of gold remains in the residues and dust.

(2) Thus on the basis of experimental results it may be concluded that the efficient processing of residue of vacuum-thermal treatment of gold-containing antimony ore of Zopkhito deposit is possible by 82-90% gold extraction by electrochemical method using chloride electrolyte to which thiourea, selective complex former with gold, is added. The process proceeds in the conditions of so-called “soft” oxidation without release of molecular chlorine and environmental contamination.

References

[1] Melnikov, S. M., Rozlovsky, F. F., and Shuklin, A. M. Antimony. 1977. M., Metallurgy , 536.

[2] Lodeyshchikov. M., ed. 1973. "Technics and Technology of Gold Extraction Abroad." In *Metallurg*, 246-52.

[3] Laskorin, I. V. M., ed. 1980. "Hydrometallurgy of Gold." In *Science*, 198.

[4] Chagelishvili, R., Gaprindashvili, V., Gagnidze, T., Kandelaki, A., Avaliani, M., and Tsiskaridze, Z. 2013. "Gold Recovery from Residues of the Vacuum-Thermal Processing of the Gold-Containing Antimony Ore of Zopkhito by Thiocarbamide Method." *Proceedings of the Georgian National Academy of Sciences. Chemical Series* 39 (1-2): 112-7.

[5] Winand, R. 1991. *Hidrometallurgy* 27: 285-316.

[6] Paddefet, I. 1982. *Chemistry of Gold*, 259.

[7] Gagnidze, T., Gvelesiani, J., and Mamporia, M. 2011. Solution for Processing of Gold-Containing Sulfide Raw Materials. Georgian Patent. №5220, B1.

[8] Sorokin, I. N. 1974. "Investigation of Anodic Etching of Thin Gold Films." *Electronic Engineering Ser.* 14 (1): 20-5.

[9] Gagnidze, T., Gvelesiani, J., and Mamporia, M. 2011. "Study of the Possibility of Gold Extraction from the Flotation Tailings of Enrichment of Barite-Polymetallicores of Madneuli." *Proceedings of the Georgian National Academy of Sciences. Chemical Series* 37 (1-2): 112-7.